EUROKLIMAT®

Give life to building , bring us back to nature

# EKSC series full-liquid screw water (ground) source heat pump unit

## ST standard type XE efficient type

EKSC series full-liquid screw water (ground) source heat pump unit

Model: ST water circulating type: EKSC250~EKSC900
ST ground-buried pipe type: EKSC250~EKSC900
XE water circulating type: EKSC265~EKSC1000
XE ground-buried pipe type: EKSC265~EKSC1000

Refrigerant: R134a

www.euroklimat.com

## *EUROKLIMAT Air Conditioner, Environmental & Energy-saving Technology from Europe.*

EUROKLIMAT (EK) was established in 1963 in Italy. For the past half a century, it has become famous as an energy-saving air-conditioning manufacturer in Italy and globally. Continuous innovation, new product development and top manufacturing quality are the driving force behind this growth.

EUROKLIMAT (EK) pursues the ideals of protecting the environment, providing physical comfort and adopting energy-saving into the whole process of product R&D, manufacturing and service. Our products covering residential, commercial and close control air-conditioner are manufactured according to the global generally accepted standards.


Allianz Assurance in Berlin in 2007


Nokia global R&D headquarters in Helsinki in 2006 and 2007


Wahaha Group


Huai'an Lianshui airport


Jiangxi Jiujiang Quanxun Electronics Co., Ltd. (Taiwan Canon)


AVIC Shenyang Aircraft Corporation


Zhengzhou Green Expo Garden, Geen Expo in China

Shanghai Shenzhou New Energy Development Co., Ltd.


Liuzhou Diwang International Business Center


Sanya Campus, National Judges College


Daguang Highway


361° (China) Co., Ltd.


Suzhou Yixiangcheng

# EKSC series screw water (ground) source heat pump unit

Water (ground) heat pump system is an efficient and energy-saving air-conditioning system that uses the shallow geothermal resources (also known as ground source energy, including underground water, soil, or ground surface water) to provide heating and cooling. The system realizes shift of low temperature thermal energy to high temperature thermal energy by introducing few electricity energy. The ground source energy is used as the heat source for heat pump in winter and the cooling source for air-conditioner in summer. The unit consumes energy of 1 kW to obtain more than 4 to 5 kW cooling/heating capacity. The energy sources from underground. The system does not discharge any waste gas, water, or residue, making it an ideal green air-conditioner that can be widely used in office buildings, hotels, schools, dormitories, hospitals, guesthouses, malls, villas, and residential areas.

DLR European Space Agency

- In 1912, the water (ground) source heat pump technology was born in Sweden and patented.
- In the1950s, countries in Europe and North America started researching into the usage of the water (ground) source heat pump technology.
- In the 1970s, the water (ground) source heat pump technology research progress dramatically because of the oil crisis and ever-deteriorating environment.
- In 1978, EK water (ground) source heat pumps were launched in Europe and won unanimous acclamation.
- In 2000, EK joined hand with the DLR European Space Agency to research into the water (ground) source heat pump technology.
- In 2009, EK China introduced the leading-edge water (ground) source heat pump technologies to launch the EKSC series screw water (ground) source heat pump units.

## Nomenclature

| EKSC | 900 | F | R | 3 | ST | SG - F | AA |
|---|---|---|---|---|---|---|---|
| 1 | 2 | 3 | 4 | 5 | 6 | 7 | 8 | 9 |

| | | |
|---|---|---|
| 1. | EKSC | EKSC series screw water (ground) source heat pump unit |
| 2. | 900 | indicates the cooling capacity code (USRT). |
| 3. | F | shows the design SN. F indicates full-liquid. |
| 4. | R | shows the function mode. R indicates cooling and heating. The default mode is cooling only. |
| 5. | 3 | shows the refrigerant code. 3: means R134a. |
| 6. | ST | shows the product design function. XE indicates the efficient type; ST indicates the standard type. |
| 7. | SG | indicates special function of the product.<br>SQ indicates the standard model for water circulation conditions.<br>QR indicates the standard total heat recovery model for water circulation conditions.<br>QV indicates the dual-condenser standard total heat recovery model for water circulation conditions.<br>SG indicates the standard model for underground water conditions.<br>GR indicates the standard total heat recovery model for underground water circulation conditions.<br>GV indicates the dual-condenser standard total heat recovery model for underground water circulation conditions.<br>SD indicates the standard model for underground circulation conditions.<br>DR indicates the standard total heat recovery model for underground circulation conditions.<br>DV indicates the dual-condenser standard total heat recovery model for underground circulation conditions. |
| 8. | F | shows the power supply feature. F indicates 380V/3N~/50Hz. |
| 9. | AA | shows detailed description of product specification changes. |

# Introduction to the water (ground) source heat pump system

## Category

Based on the different media for absorbing energy, the water (ground) source heat pump system is divided into three categories:

1. Underground water system (open circulating well water system)
2. Soil buried-pipe system (ground source closed circulating system)
3. Ground surface water system (ground surface water or lake water circulating system)

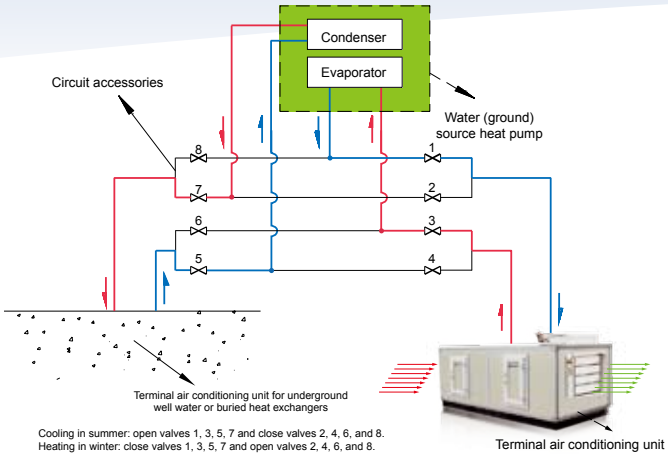


## Water (ground) source heat pump system

### Open circulating well water system

Heat is absorbed from or discharged into the underground water to heat or cool buildings. The largest advantage of this solution is that the underground water temperature is constant at 10 to 16°C, which reduces the initial investment and the operating expenses. The open circulating system is generally used in coastal areas. The soil in these areas allows water to be recharged into the water conveyor layer in the soil through recharging wells.

### Ground source closed circulating system

Heat exchangers (pipes) are laid in the soil for heat exchange directly with the soil. Heat is supplied to the unit in winter, and heat discharged by the unit is absorbed in summer. A vertical loop (as shown in the figure on the right) is installed as follows: Vertical holes are drilled in the soil, and then polyethylene plastic pipes are mounted in the holes. In a horizontal loop, heat exchangers (tubes) are buried 1.5 m deep under the ground. In vertical loop or horizontal loop, heat is absorbed from or discharged into the soil.

### Ground surface water or lake water circulating system

Ground surface water resources such as river, lake and sea water are used for heat exchange through heat exchange devices buried in water. Heat is provided to or discharged from buildings by installing closed heat exchange devices in lake or other water sources near the buildings. The heat exchange devices need to be pleasant-looking and facilitate water discharge. The size and depth of a lake is critical. Precise calculation is required to determine whether the lake water can meet the cooling and heating requirements of buildings.

## System flowchart

### Cooling in summer

When the unit works in cooling mode in summer, well water enters into the condensers of the EKSC water (ground) source unit as the heat discharge source. Refrigerant is evaporated in the evaporator, absorbing heat of water in the cooling system. In this way, 7°C chilled water is offered to the buildings. After being compressed by the compressors, the refrigerant enters into the condensers of the unit. The well water takes away the heat and is recharged underground.

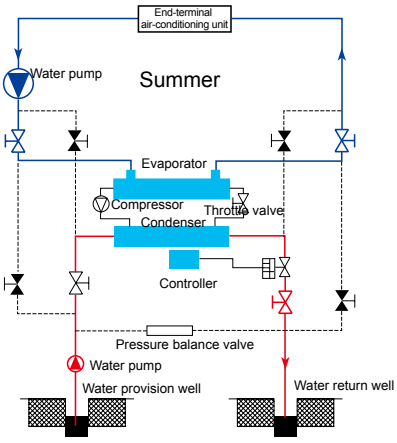


### Heating in winter

When the unit works in heating mode in summer, well water enters into the evaporators of the EKSC water (ground) source unit as the heat absorbing source. The refrigerant is evaporated in the evaporators, absorbing heat in the well water. Then the well water is recharged underground. After being compressed by compressors, the refrigerant becomes high-temperature high-pressure overheating gas and enters into the condensers to heat the circulating water, obtaining hot water at 45°C to 55°C.

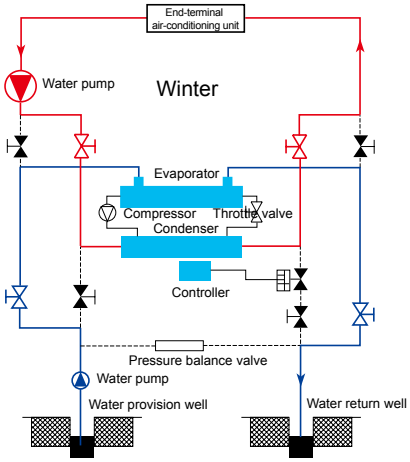

## Increasing Efficiency and Saving Energy

The heat exchanger of the EKSC water (ground) source heat pump system exchanges heat with the ground source energy, reducing consumption of primary energy while delivering high and stable heat exchange efficiency. Such a system is barely affected by the environment. Its annual comprehensive running efficiency is 40% to 60% higher than that of a traditional central air conditioning system.


## Delivering Green and Environment-Friendly Performance

EKSC water (ground) source heat pump system does not need boilers to provide heating in winter. The system does not discharge any waste gas, water or residue to the environment. It complies with national energy and environment policies and is an ideal green air-conditioner.


## Reliable system

The running conditions of EKSC water (ground) source heat pump system are stable and are not affected by changes to the environmental temperature. The heating capacity does not suffer attenuation even in cold weather, and there is no concern for frosting.

## Saving Space

EKSC water (ground) source heat pump system does not have a cooling tower or other outdoor devices. In addition, it efficiently saves building area as it does not need the boiler room, cooling tower, auxiliary coal yard and residue yard, making the vertical appearance of the building more pleasant. It can further efficiently reduce the heat land effect surrounding the building.

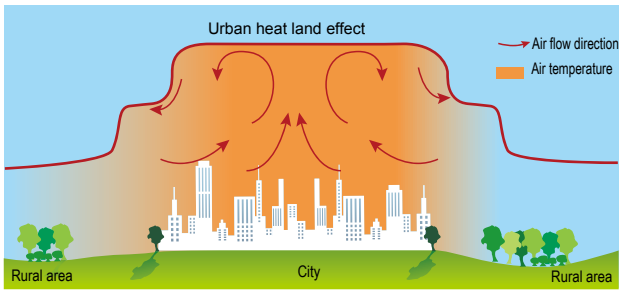


## Low maintenance cost

EKSC water (ground) source heat pump system does not require a cooling tower or roof fan, and does not incur installation or maintenance costs for outdoor equipment. The compressors work steadily and do not encounter problems in a traditional central air conditioning system where the refrigerant pressure is excessively high or low, thereby greatly reducing maintenance costs.

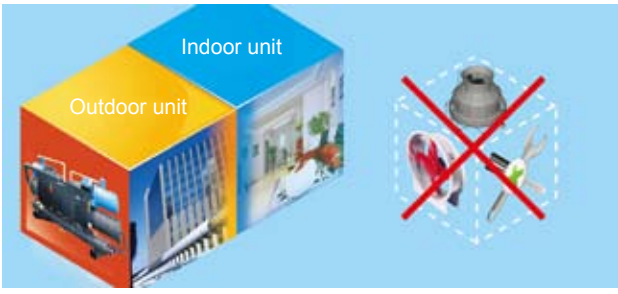


## Supporting a Wide Application Scope

EKSC water (ground) source heat pump system integrates heating, cooling and supply of living hot water. One such system can replace two original systems for boiler and air-conditioner. It is not restricted by environmental or climatic conditions and can be widely used in hotels, schools, malls, and office buildings.

# Unit Features

## A single compressor system provides cooling capacity of up to 500 RT.

### Single system full-liquid evaporator
### Multi-compressor single-system design

The industry-leading single-system full-liquid evaporator design and multi-compressor single-system design enable the single compressor system to provide cooling capacity of up to 500 RT. The compressors start one by one, greatly reducing shock of the startup current on the grid. In partial load, the dual compressors run by turns, providing a long life cycle.

## 99.95%

### Oil separation efficiency as high as 99.95%
### The air return outlet of the full-liquid evaporator is directly connected to the air suction inlet of the compressor.

The optimal built-in oil route lubricating system is equipped with an innovative external efficient oil separator, which has a unique structure to change the flow direction and works with a multi-layer high-density oil filter to deliver the optimal oil separation effect with efficiency of more than 99.95%. The air return outlet of the full-liquid evaporator is directly connected to the air suction inlet of the compressor. This effectively reduces pressure loss and ineffective overheat of the air suction pipeline. Such design is compact, efficient and energy-saving.

## Environment-friendly R134a refrigerant

### The refrigerant injection amount is reduced by 50% or more compared with a traditional full-liquid unit.
### The lubricant injection amount is reduced by 50% or more compared with a traditional full-liquid unit.
### Applicable to heat pump, full heat recovery, and cooling accumulation conditions

The full series unit adopts the environment-friendly R134a refrigerant and efficiently reduces the refrigerant filling amount. The refrigerant and lubricant injection amount is reduced by 50% or more compared with a traditional full-liquid unit. The full series unit meets the national requirements for energy efficiency of energy-saving air-conditioning products, and can be used in heat pump, full heat recovery, and cold energy storage to meet different customer requirements.

## Efficient and stable R134a full-liquid screw compressor

- EK's latest leading R134a efficient dual-screw compressor technology specifically designed for full-liquid unit is used. The maximum cooling capacity of a single-compressor system can reach 450 RT, efficiently reducing the number of compressors while obtaining high full-load COP. The full series unit meets national requirements for energy efficiency of energy-saving air-conditioning products.
- Direct connection design
  The air return outlet of the full-liquid evaporator is directly connected to the air suction inlet of the compressor. This effectively reduces pressure loss and ineffective overheat of the air suction pipeline. Such a design is compact, efficient and energy-saving.
- Oil supply upon pressure difference
  The optimal built-in oil route lubricating system is equipped with an innovative external efficient oil separator. The oil is supplied through pressure difference. The structure is simple, safe and efficient.
- Oil spray and noise reduction
  The unique oil spray and noise reduction function can spray a small amount of lubricant to the air exhaust side, and form an even oil film on the surface of the rotor to absorb sound energy and reduce the overall noise of the compressors. In addition, the even oil film can efficiently lubricate and seal, reducing the leakage amount and improving compressor efficiency.
- Motor cooling
  International famous efficient dual-pole three-phase F-level insulation induction motor is used. The independent motor cooling and heat dissipation design efficiently reduces the air suction pressure loss and invalid overheat of air suction. A PT100 temperature sensor is built in, and an INT69 module array is configured to protect the motor, providing active control on motor temperature rise. The coil temperature of the compressor motor can be accurately monitored and regulated to ensure long-term and wide-range running of the motor in the running range of the compressors.
- The design of smart control on even spray for liquid refrigerant is adopted, improving the compressor efficiency while fully reducing the risks of large-amount leakage of refrigerant and lubricant. In addition, no heat is discharged to the equipment room, saving the initial investment and running expenses for cooling equipment in the equipment room.
- Capacity spool
  The spool-type load adder/reducer device is used as the compressor regulation mode. The capacity spool structure configures a highly reliable international brand electromagnet for precise control and perfect match with actual load to ensure efficient running of the unit, provide comfort and save the energy.
- Dual-layer shell
  A fine dual-layer shell forged by gray cast iron and processed by precision M/C machine tools is used. A three-dimensional precision tester is used to test the processing precision, ensuring that the gap of the compressor meets the requirements of high-efficiency calculation. The dual-layer design complies with pressure-bearing requirements, and reduces the noise. Such a high-strength and high-rigidity design ensures long-term running of the compressor.

High-speed rotor grinder for EK double screw compressor

# Unit Features

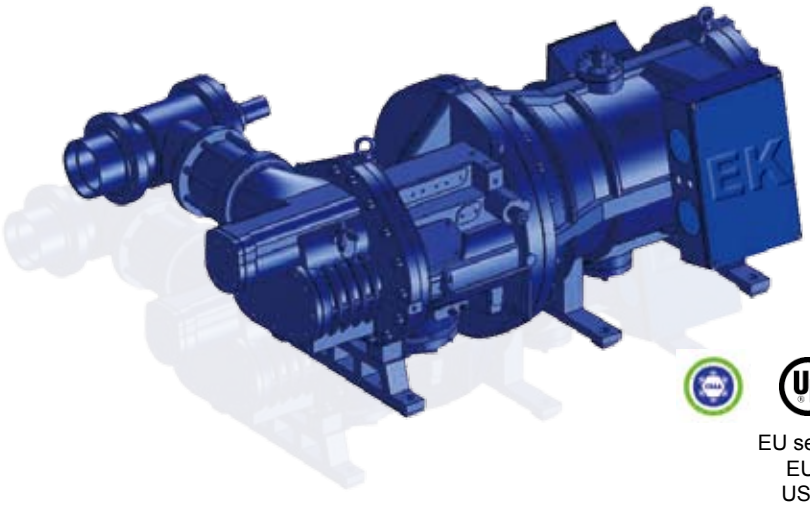

EU security regulation certification CEmark,
EU pressure vessel certification PED,
US laboratory national certification UL,
and CRAA certification

- Bearing
  High-precision and large-frame-size axial and radial bearings are used to strongly support male and female rotors. In addition, excellent oil circuit and organization design is provided to efficiently prolong the bearing lifecycle.
- Patented rotor
  The patent 5:6 asymmetrical rotor gear form forged by special high-precision rotor grinding machine tools is used. Such a gear form provides high precision and stable quality. In continuous running state, the rotor can maintain the optimal gap to meet the requirements for the highest efficiency.

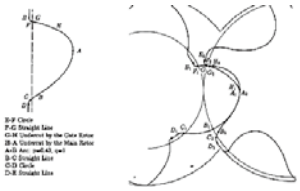

Patent for EK dual-screw compressor linear model

Measurement for EK dual-screw compressor linear model

## Efficient heat exchanger

- All internal heat exchange pipes use efficient heat exchange copper pipes with inner and outer threads to ensure optimal heat exchange flow rate of the refrigerant and chilling medium, enhance the heat transfer at the water side and refrigerant side, optimize the heat transfer efficiency, reduce energy consumption of the unit, and lower the running expenses.
- The evaporator adopts the latest efficient full-liquid design to efficiently reduce the filling amount of the refrigerant by 50% or more compared with a traditional full-liquid heat exchanger.
- The unique built-in over-cooling design of the system can fully avoid hydraulic shock of compressors and improve the cooling capacity and efficiency of the unit.
- The multi-level automatic oil return system accurately returns oil regardless of the liquid level, eliminating impact on heat exchange efficiency.
- The standard piping mode provided by the heat exchanger is trough coupling connection (with short tube), facilitating field installation. Each evaporator and condenser is equipped with independent air exhaust and water drainage devices.

# Unit Features

## Precise and efficient liquid level control

- The full series adopts liquid level controller with high-resolution digital display and international famous brand electronic expansion valve to steadily control the liquid level of the evaporator at the optimal position so that the unit achieves the optimal heat exchange effect at any load. This ensures high-performance running of the unit and apparently improves the efficiency under partial load.

## Innovative external simple and efficient oil separator

- The innovative external efficient oil separator has a unique structure to change the flow direction and works with a multi-layer high-density oil filter to deliver the optimal oil separation effect with efficiency of more than 99.95%.
- Different from an ordinary external oil separator, this efficient oil separator is not affected under various harsh conditions and partial load as well as achieving extremely high oil separation efficiency in full load of the compressor.
- The oil filling amount is 50% or less of that of a traditional full-liquid unit. The subsequent maintenance and care cost is low.
- The oil return port of the oil separator is a chilled oil bunker with high-density washable metal oil filter (as precise as 10 μm) of a large area and small pressure drop. It does not need maintenance or replacement. In addition, a mechanical oil level switch and oil pressure difference protection logic are provided as standard configuration. High/low oil check poles are mounted on the shell, facilitating observation. The maintenance is convenient, and comprehensive measures for safe running are provided.


## Wide application in multiple conditions

- The full series unit can be applied in a wide range of conditions including heat pump, full heat recovery, and cold energy storage conditions, meeting different customer requirements.

## Environment-friendly and economic storage of refrigerant

- When the unit stops or is under care, the refrigerant needs to be stored in a container to reduce loss. The full series unit is equipped with one-way valve and cut-off valve at the air exhaust side, and a closing valve is set at the inlet/outlet of the container to transfer the refrigerant in the local section to other containers, greatly reducing running and maintenance costs for the customer.

## Environment-friendly R134a refrigerant

The unit can select the environment-friendly R134a refrigerant and run with high efficiency under full load or partial load, saving energy while not damaging the ozone layer.


## Compact Structure and Easy Installation

- The unit has a compact structure. The start and control systems are integrated. The main switch provides a prolonged handle for easy operation and automatic locking when the switch is on. After the switch is turned on, the automatic locking mode is enabled, providing a safe way to open the cabinet door.
- The unit has a tidy layout and a pleasant appearance. The unit features a precise and compact design, and a small volume, facilitating transportation and greatly reducing occupation area in the equipment room. Only a small workload for piping and cabling is required for installation to efficiently shorten the construction period and reduce the installation cost.

# Unit Features

## Smart Control

- The large-screen LCD developed by EK is directly connected to the digital control center, greatly improving efficiency and providing monitoring, data recording, security protection, and easy operations.
- The chilled water outlet temperature is controlled to a precision of ±0.2°C. Various sensors in the system can accurately transfer signals and data to the controller so that the controller can protect unit parts in a timely manner, ensuring reliable running of the unit.
- Three-level password protection prevents mis-operation by non-professional personnel and ensures safe running of the unit. In addition, multiple protection functions are provided.
- All running parameters and alerts of the unit can be recorded and saved.
- The start/stop of the unit can be remotely controlled and data can be transmitted over Internet.


10-inch (800 x 480 pixels)
super-large touch screen

## Display information

The control center continuously monitors the running system and displays the unit running status and fault information.

### The status information includes:

- Start/stop of compressors
- Temperature points (multiple)
- Unit load
- Water pump status
- Opening of valves
- Pressure points (multiple)
- Unit running status

### Warning information includes:

- Anti-freezing alert
- Faults of various pressure/temperature sensors
- Valve faults
- Various protection alerts (such as compressor overload and water pump overload)

## Centralized control


EK centralized control system adopts the industry-leading control solution. The product configuration is applicable to the control system solution for the chilled pump, cooling pump and cooling tower. Multiple persons are allowed to control and monitor the unit on the homepage of a Microsoft-based web browser.

# Specifications

## SQ water circulation type ST standard model (EKSC250~EKSC900)

| Model | | | EKSC250 | EKSC280 | EKSC330 | EKSC400 | EKSC450 | EKSC500 | EKSC560 | EKSC660 | EKSC800 | EKSC900 |
|---|---|---|---|---|---|---|---|---|---|---|---|---|
| Cooling condition | Cooling capacity | U.S.RT | 248.5 | 280.6 | 331.8 | 403.5 | 448.8 | 496.9 | 561.3 | 663.5 | 806.9 | 897.6 |
| | | kW | 873.8 | 987.0 | 1166.9 | 1419.0 | 1578.4 | 1747.6 | 1974.0 | 2333.7 | 2837.9 | 3156.8 |
| | | $x10^4$kcal/h | 75.1 | 84.9 | 100.4 | 122.0 | 135.7 | 150.3 | 169.8 | 200.7 | 244.1 | 271.5 |
| | Input power | kW | 153.3 | 170.6 | 200.6 | 244.5 | 271.5 | 306.5 | 341.2 | 401.2 | 489.0 | 543.0 |
| | COP | kW/kW | 5.70 | 5.79 | 5.82 | 5.80 | 5.81 | 5.70 | 5.79 | 5.82 | 5.80 | 5.81 |
| | Chilled water flow | $m^3$/h | 150.3 | 169.8 | 200.7 | 244.1 | 271.5 | 300.6 | 339.5 | 401.4 | 488.1 | 543.0 |
| | Chilled water pressure drop | kPa | 42 | 42 | 49 | 55 | 57 | 62 | 67 | 69 | 72 | 72 |
| | Water flow at water source | $m^3$/h | 176.7 | 199.1 | 235.2 | 286.1 | 318.2 | 353.3 | 398.2 | 470.4 | 572.2 | 636.4 |
| | Water pressure drop at water source | kPa | 47 | 47 | 59 | 67 | 77 | 82 | 82 | 82 | 85 | 85 |
| Heating condition | Heating capacity | U.S.RT | 347.8 | 392.3 | 462.4 | 562.4 | 625.4 | 695.6 | 784.5 | 924.9 | 1124.9 | 1250.7 |
| | | kW | 1223.2 | 1379.6 | 1626.4 | 1978.1 | 2199.4 | 2446.4 | 2759.2 | 3252.8 | 3956.2 | 4398.8 |
| | | $x10^4$kcal/h | 105.2 | 118.6 | 139.9 | 170.1 | 189.1 | 210.4 | 237.3 | 279.7 | 340.2 | 378.3 |
| | Input power | kW | 197.1 | 220.1 | 259.2 | 315.3 | 350.6 | 394.2 | 440.2 | 518.4 | 630.6 | 701.2 |
| | COP | kW/kW | 6.21 | 6.27 | 6.27 | 6.27 | 6.27 | 6.21 | 6.27 | 6.27 | 6.27 | 6.27 |
| | Hot water flow | $m^3$/h | 150.3 | 169.5 | 199.8 | 243.0 | 270.2 | 300.6 | 339.0 | 399.6 | 486.0 | 540.4 |
| | Hot water pressure drop | kPa | 34 | 34 | 43 | 48 | 56 | 59 | 59 | 59 | 61 | 61 |
| | Water flow at water source | $m^3$/h | 176.5 | 199.4 | 235.2 | 286.0 | 318.0 | 353.0 | 398.9 | 470.3 | 572.0 | 636.0 |
| | Water pressure drop at water source | kPa | 58 | 58 | 67 | 76 | 78 | 82 | 87 | 89 | 90 | 90 |
| Compressor | Model | | Semi-enclosed dual-screw compressor | | | | | | | | | |
| | Quantity | | 1 | 1 | 1 | 1 | 1 | 2 | 2 | 2 | 2 | 2 |
| Startup mode | | | Y-Δ | | | | | | | | | |
| Power supply | | | 380V/3~/50Hz | | | | | | | | | |
| Condenser | Model | | Shell-and-tube | | | | | | | | | |
| | Quantity | | 1 | 1 | 1 | 1 | 1 | 1 | 1 | 1 | 1 | 1 |
| Evaporator | Model | | Full-liquid | | | | | | | | | |
| | Quantity | | 1 | 1 | 1 | 1 | 1 | 1 | 1 | 1 | 1 | 1 |
| Refrigerant | Type | | R134a | | | | | | | | | |
| Lubricant | Brand | | EK03 | | | | | | | | | |
| | Filling amount | L | 50 | 50 | 60 | 60 | 60 | 80 | 80 | 100 | 100 | 100 |
| Temperature control | | | Water temperature PID control | | | | | | | | | |
| External diameter of chilled water inlet/outlet pipe | | φ(mm) | 219.1 | 219.1 | 219.1 | 219.1 | 219.1 | 219.1 | 219.1 | 273 | 273 | 273 |
| External diameter of cooling water inlet/outlet pipe | | φ(mm) | 139.7 | 139.7 | 168.3 | 168.3 | 168.3 | 168.3 | 168.3 | 168.3 | 168.3 | 168.3 |
| Insulation materials | | | Elastomeric flexible closed-cell insulation material | | | | | | | | | |
| Unit weight | | kg | 5050 | 5250 | 5350 | 5450 | 5600 | 9510 | 9900 | 10070 | 10270 | 10580 |
| Operating weight | | kg | 5480 | 5680 | 5780 | 5880 | 6050 | 10250 | 10650 | 10810 | 11010 | 11310 |
| Rated current (cooling) | | A | 263 | 293 | 345 | 420 | 466 | 526 | 586 | 689 | 840 | 933 |
| Rated current (heating) | | A | 335 | 376 | 443 | 538 | 598 | 670 | 752 | 886 | 1076 | 1196 |
| Startup current | | A | 749 | 882 | 1358 | 1358 | 1388 | 749 | 882 | 1358 | 1358 | 1388 |
| Maximum startup current (cooling) | | A | 749 | 882 | 1358 | 1358 | 1388 | 1012 | 1175 | 1702 | 1778 | 1854 |
| Maximum startup current (heating) | | A | 749 | 882 | 1358 | 1358 | 1388 | 1347 | 1551 | 2145 | 2316 | 2452 |
| Length x width x height | | mm | 5060x2200x2450 | | 5060x2200x2550 | | | 5100x2200x2650 | | 5300x2200x2750 | | |

Note:

- Nominal cooling conditions: The inlet/outlet water temperature of the evaporator is 12/7°C; the inlet/outlet water temperature of the condenser is 30/35°C.
- Nominal heating conditions: The water flow in the preceding table is guaranteed, the inlet/outlet water temperature of the condenser is 40/~°C; the inlet/outlet water temperature of the evaporator is 20/~°C (note: add anti-freezer if the water temperature in the water circuit of the water source in winter is below 3°C).
- The water pressure drop of the evaporator or condenser does not include resistance of any external water pipe or component.
- For details about on-site power distribution and wiring for unit installation, see the nameplate or installation manual of the unit.

## SD ground buried pipe ST standard model (EKSC250~EKSC900)

| Model | | | EKSC250 | EKSC280 | EKSC330 | EKSC400 | EKSC450 | EKSC500 | EKSC560 | EKSC660 | EKSC800 | EKSC900 |
|---|---|---|---|---|---|---|---|---|---|---|---|---|
| Cooling condition | Cooling capacity | U.S.RT | 262.9 | 297.1 | 350.3 | 426.0 | 473.7 | 525.8 | 594.2 | 700.6 | 852.0 | 947.4 |
| | | kW | 924.6 | 1044.9 | 1232.0 | 1498.3 | 1666.0 | 1849.2 | 2089.8 | 2464.0 | 2996.6 | 3332.0 |
| | | $x10^4$kcal/h | 79.5 | 89.9 | 106.0 | 128.9 | 143.3 | 159.0 | 179.7 | 211.9 | 257.7 | 286.6 |
| | Input power | kW | 139.9 | 156.3 | 184.0 | 223.8 | 248.9 | 279.8 | 312.6 | 368.0 | 447.6 | 497.8 |
| | COP | kW/kW | 6.61 | 6.69 | 6.70 | 6.69 | 6.69 | 6.61 | 6.69 | 6.70 | 6.69 | 6.69 |
| | Chilled water flow | $m^3$/h | 159.0 | 179.7 | 211.9 | 257.7 | 286.6 | 318.1 | 359.4 | 423.8 | 515.4 | 573.1 |
| | Chilled water pressure drop | kPa | 47 | 47 | 55 | 61 | 63 | 69 | 75 | 77 | 80 | 80 |
| | Water flow at water source | $m^3$/h | 183.1 | 206.6 | 243.6 | 296.2 | 329.4 | 366.2 | 413.2 | 487.1 | 592.4 | 658.7 |
| | Water pressure drop at water source | kPa | 51 | 51 | 64 | 72 | 77 | 79 | 79 | 78 | 81 | 81 |
| Heating condition | Heating capacity | U.S.RT | 239.1 | 269.5 | 317.7 | 386.4 | 429.6 | 478.2 | 539.0 | 635.4 | 772.8 | 859.3 |
| | | kW | 840.9 | 947.8 | 1117.3 | 1358.9 | 1511.0 | 1681.8 | 1895.6 | 2234.6 | 2717.8 | 3022.0 |
| | | $x10^4$kcal/h | 72.3 | 81.5 | 96.1 | 116.9 | 129.9 | 144.6 | 163.0 | 192.2 | 233.7 | 259.9 |
| | Input power | kW | 177.1 | 197.7 | 232.8 | 283.2 | 314.9 | 354.2 | 395.4 | 465.6 | 566.4 | 629.8 |
| | COP | kW/kW | 4.75 | 4.79 | 4.80 | 4.80 | 4.80 | 4.75 | 4.79 | 4.80 | 4.80 | 4.80 |
| | Hot water flow | $m^3$/h | 158.9 | 179.1 | 211.2 | 256.8 | 285.6 | 317.9 | 358.3 | 422.4 | 513.7 | 571.2 |
| | Hot water pressure drop | kPa | 38 | 38 | 48 | 54 | 58 | 60 | 59 | 59 | 61 | 61 |
| | Water flow at water source | $m^3$/h | 183.0 | 206.8 | 243.8 | 296.5 | 329.7 | 365.9 | 413.5 | 487.6 | 593.0 | 659.4 |
| | Water pressure drop at water source | kPa | 62 | 62 | 73 | 81 | 83 | 84 | 85 | 86 | 88 | 88 |
| Compressor | Model | | Semi-enclosed dual-screw compressor | | | | | | | | | |
| | Quantity | | 1 | 1 | 1 | 1 | 1 | 2 | 2 | 2 | 2 | 2 |
| Startup mode | | | Y-Δ | | | | | | | | | |
| Power supply | | | 380V/3~/50Hz | | | | | | | | | |
| Condenser | Model | | Shell-and-tube | | | | | | | | | |
| | Quantity | | 1 | 1 | 1 | 1 | 1 | 1 | 1 | 1 | 1 | 1 |
| Evaporator | Model | | Full-liquid | | | | | | | | | |
| | Quantity | | 1 | 1 | 1 | 1 | 1 | 1 | 1 | 1 | 1 | 1 |
| Refrigerant | Type | | R134a | | | | | | | | | |
| Lubricant | Brand | | EK03 | | | | | | | | | |
| | Filling amount | L | 50 | 50 | 60 | 60 | 60 | 80 | 80 | 100 | 100 | 100 |
| Temperature control | | | Water temperature PID control | | | | | | | | | |
| External diameter of chilled water inlet/outlet pipe | | φ(mm) | 219.1 | 219.1 | 219.1 | 219.1 | 219.1 | 219.1 | 219.1 | 273 | 273 | 273 |
| External diameter of cooling water inlet/outlet pipe | | φ(mm) | 139.7 | 139.7 | 168.3 | 168.3 | 168.3 | 168.3 | 168.3 | 168.3 | 168.3 | 168.3 |
| Insulation materials | | | Elastomeric flexible closed-cell insulation material | | | | | | | | | |
| Unit weight | | kg | 5050 | 5250 | 5350 | 5450 | 5600 | 9510 | 9900 | 10070 | 10270 | 10580 |
| Operating weight | | kg | 5480 | 5680 | 5780 | 5880 | 6050 | 10250 | 10650 | 10810 | 11010 | 11310 |
| Rated current (cooling) | | A | 249 | 267 | 314 | 382 | 425 | 498 | 534 | 628 | 764 | 850 |
| Rated current (heating) | | A | 306 | 336 | 397 | 483 | 538 | 612 | 672 | 794 | 966 | 1076 |
| Startup current | | A | 749 | 882 | 1358 | 1358 | 1388 | 749 | 882 | 1358 | 1358 | 1388 |
| Maximum startup current (cooling) | | A | 749 | 882 | 1358 | 1358 | 1388 | 998 | 1149 | 1672 | 1740 | 1813 |
| Maximum startup current (heating) | | A | 749 | 882 | 1358 | 1358 | 1388 | 1304 | 1485 | 2069 | 2223 | 2351 |
| Length x width x height | | mm | 5060x2200x2450 | | 5060x2200x2550 | | | 5100x2200x2650 | | 5300x2200x2750 | | |

Note:

- Nominal cooling conditions: The inlet/outlet water temperature of the evaporator is 12/7°C; the inlet/outlet water temperature of the condenser is 25/30°C.
- Nominal heating conditions: The water flow in the preceding table is guaranteed, the inlet/outlet water temperature of the condenser is ~/45°C; the inlet/outlet water temperature of the evaporator is 7/3.8°C (note: add anti-freezer if the water temperature in the water circuit of the water source in winter is below 3°C).
- The water pressure drop of the evaporator or condenser does not include resistance of any external water pipe or component.
- For details about on-site power distribution and wiring for unit installation, see the nameplate or installation manual of the unit.

# Specifications

## SQ water circulation type XE efficient model (EKSC265~EKSC1000)

| Model | | | EKSC265 | EKSC300 | EKSC360 | EKSC440 | EKSC500 | EKSC550 | EKSC600 | EKSC720 | EKSC880 | EKSC1000 |
|---|---|---|---|---|---|---|---|---|---|---|---|---|
| Cooling condition | Cooling capacity | U.S.RT | 265.7 | 300.1 | 359.1 | 439.4 | 496.5 | 545.1 | 600.1 | 718.3 | 878.8 | 993.0 |
| | | kW | 934.5 | 1055.3 | 1263.0 | 1545.3 | 1746.2 | 1917.0 | 2110.6 | 2526.1 | 3090.6 | 3492.4 |
| | | x10$^4$kcal/h | 80.4 | 90.8 | 108.6 | 132.9 | 150.2 | 164.9 | 181.5 | 217.2 | 265.8 | 300.3 |
| | Input power | kW | 151.9 | 169.8 | 200.7 | 245.1 | 276.3 | 308.4 | 339.6 | 401.3 | 490.1 | 552.6 |
| | COP | kW/kW | 6.15 | 6.21 | 6.29 | 6.30 | 6.32 | 6.22 | 6.21 | 6.29 | 6.31 | 6.32 |
| | Chilled water flow | m$^3$/h | 160.7 | 181.5 | 217.2 | 265.8 | 300.3 | 329.7 | 363.0 | 434.5 | 531.6 | 600.7 |
| | Chilled water pressure drop | kPa | 45 | 45 | 52 | 58 | 60 | 65 | 70 | 72 | 75 | 75 |
| | Water flow at water source | m$^3$/h | 186.9 | 210.7 | 251.8 | 307.9 | 347.9 | 382.8 | 421.4 | 503.5 | 615.9 | 695.7 |
| | Water pressure drop at water source | kPa | 50 | 50 | 62 | 70 | 80 | 85 | 85 | 85 | 88 | 88 |
| Heating condition | Heating capacity | U.S.RT | 367.7 | 415.0 | 494.7 | 603.7 | 681.9 | 753.0 | 830.0 | 989.3 | 1207.4 | 1363.8 |
| | | kW | 1293.1 | 1459.6 | 1739.7 | 2123.3 | 2398.2 | 2648.4 | 2919.2 | 3479.4 | 4246.6 | 4796.4 |
| | | x10$^4$kcal/h | 111.2 | 125.5 | 149.6 | 182.6 | 206.2 | 227.8 | 251.1 | 299.2 | 365.2 | 412.5 |
| | Input power | kW | 195.3 | 219.2 | 259.6 | 312.4 | 352.9 | 396.5 | 438.4 | 519.2 | 624.8 | 705.8 |
| | COP | kW/kW | 6.62 | 6.66 | 6.70 | 6.80 | 6.80 | 6.68 | 6.66 | 6.70 | 6.80 | 6.80 |
| | Hot water flow | m$^3$/h | 161.2 | 181.9 | 216.8 | 264.6 | 298.9 | 330.1 | 363.8 | 433.7 | 529.3 | 597.8 |
| | Hot water pressure drop | kPa | 37 | 37 | 46 | 52 | 59 | 63 | 63 | 63 | 65 | 65 |
| | Water flow at water source | m$^3$/h | 187.0 | 211.2 | 252.1 | 308.4 | 348.3 | 383.5 | 422.5 | 504.1 | 616.8 | 696.6 |
| | Water pressure drop at water source | kPa | 61 | 61 | 70 | 78 | 81 | 82 | 87 | 89 | 90 | 90 |
| Compressor | Model | | Semi-enclosed dual-screw compressor | | | | | | | | | |
| | Quantity | | 1 | 1 | 1 | 1 | 1 | 2 | 2 | 2 | 2 | 2 |
| Startup mode | | | Y-Δ | | | | | | | | | |
| Power supply | | | 380V/3~/50Hz | | | | | | | | | |
| Condenser | Model | | Shell-and-tube | | | | | | | | | |
| | Quantity | | 1 | 1 | 1 | 1 | 1 | 1 | 1 | 1 | 1 | 1 |
| Evaporator | Model | | Full-liquid | | | | | | | | | |
| | Quantity | | 1 | 1 | 1 | 1 | 1 | 1 | 1 | 1 | 1 | 1 |
| Refrigerant | Type | | R134a | | | | | | | | | |
| Lubricant | Brand | | EK03 | | | | | | | | | |
| | Filling amount | L | 50 | 50 | 60 | 60 | 60 | 80 | 80 | 100 | 100 | 100 |
| Temperature control | | | Water temperature PID control | | | | | | | | | |
| External diameter of chilled water inlet/outlet pipe | | φ(mm) | 219.1 | 219.1 | 219.1 | 219.1 | 219.1 | 219.1 | 219.1 | 273 | 273 | 273 |
| External diameter of cooling water inlet/outlet pipe | | φ(mm) | 139.7 | 139.7 | 168.3 | 168.3 | 168.3 | 168.3 | 168.3 | 168.3 | 168.3 | 168.3 |
| Insulation materials | | | Elastomeric flexible closed-cell insulation material | | | | | | | | | |
| Unit weight | | kg | 5550 | 5750 | 5850 | 5950 | 6100 | 10010 | 10400 | 10570 | 10770 | 11080 |
| Operating weight | | kg | 5980 | 6180 | 6280 | 6380 | 6550 | 10750 | 11150 | 11310 | 11510 | 11810 |
| Rated current (cooling) | | A | 261 | 292 | 345 | 421 | 475 | 530 | 583 | 689 | 842 | 949 |
| Rated current (heating) | | A | 332 | 374 | 443 | 533 | 602 | 674 | 748 | 886 | 1066 | 1204 |
| Startup current | | A | 749 | 882 | 1358 | 1358 | 1388 | 749 | 882 | 1358 | 1358 | 1388 |
| Maximum startup current (cooling) | | A | 749 | 882 | 1358 | 1358 | 1388 | 1014 | 1174 | 1703 | 1779 | 1863 |
| Maximum startup current (heating) | | A | 749 | 882 | 1358 | 1358 | 1388 | 1351 | 1548 | 2146 | 2312 | 2465 |
| Length x width x height | | mm | 4110x1800x2450 | | 4110x1900x2550 | | | 5110x2200x2650 | | 5300x2200x2750 | | |

Note:

- Nominal cooling conditions: The inlet/outlet water temperature of the evaporator is 12/7°C; the inlet/outlet water temperature of the condenser is 30/35°C.
- Nominal heating conditions: The water flow in the preceding table is guaranteed, the inlet/outlet water temperature of the condenser is 40/~°C; the inlet/outlet water temperature of the evaporator is 20/~°C (note: add anti-freezer if the water temperature in the water circuit of the water source in winter is below 3°C).
- The water pressure drop of the evaporator or condenser does not include resistance of any external water pipe or component.
- For details about on-site power distribution and wiring for unit installation, see the nameplate or installation manual of the unit.

EUROKLIMAT®

## SD ground buried pipe XE efficient (EKSC265~EKSC1000)

| Model | | | EKSC265 | EKSC300 | EKSC360 | EKSC440 | EKSC500 | EKSC550 | EKSC600 | EKSC720 | EKSC880 | EKSC1000 |
|---|---|---|---|---|---|---|---|---|---|---|---|---|
| Cooling condition | Cooling capacity | U.S.RT | 280.4 | 316.8 | 378.0 | 462.5 | 522.4 | 575.1 | 633.6 | 756.0 | 925.0 | 1044.8 |
| | | kW | 986.1 | 1114.2 | 1329.5 | 1626.6 | 1837.2 | 2022.8 | 2228.4 | 2659.0 | 3253.2 | 3674.4 |
| | | $x10^4$kcal/h | 84.8 | 95.8 | 114.3 | 139.9 | 158.0 | 174.0 | 191.6 | 228.7 | 279.8 | 316.0 |
| | Input power | kW | 141.6 | 159.0 | 188.2 | 226.5 | 255.9 | 287.5 | 318.0 | 376.4 | 453.0 | 511.8 |
| | COP | kW/kW | 6.96 | 7.01 | 7.06 | 7.18 | 7.18 | 7.04 | 7.01 | 7.06 | 7.18 | 7.18 |
| | Chilled water flow | $m^3$/h | 169.6 | 191.6 | 228.7 | 279.8 | 316.0 | 347.9 | 383.3 | 457.3 | 559.6 | 632.0 |
| | Chilled water pressure drop | kPa | 50 | 50 | 58 | 64 | 66 | 72 | 78 | 80 | 83 | 83 |
| | Water flow at water source | $m^3$/h | 194.0 | 219.0 | 261.0 | 318.7 | 360.0 | 397.4 | 438.0 | 522.1 | 637.5 | 720.0 |
| | Water pressure drop at water source | kPa | 54 | 54 | 67 | 75 | 80 | 82 | 82 | 81 | 84 | 84 |
| Heating condition | Heating capacity | U.S.RT | 254.0 | 286.6 | 341.4 | 416.4 | 470.3 | 519.9 | 573.2 | 682.9 | 832.9 | 940.7 |
| | | kW | 893.2 | 1007.9 | 1200.8 | 1464.6 | 1654.2 | 1828.5 | 2015.8 | 2401.6 | 2929.2 | 3308.4 |
| | | $x10^4$kcal/h | 76.8 | 86.7 | 103.3 | 126.0 | 142.3 | 157.3 | 173.4 | 206.5 | 251.9 | 284.5 |
| | Input power | kW | 175.4 | 196.9 | 233.1 | 280.6 | 316.9 | 356.1 | 393.8 | 466.2 | 561.2 | 633.8 |
| | COP | kW/kW | 5.09 | 5.12 | 5.15 | 5.22 | 5.22 | 5.13 | 5.12 | 5.15 | 5.22 | 5.22 |
| | Hot water flow | $m^3$/h | 168.8 | 190.5 | 227.0 | 276.8 | 312.7 | 345.6 | 381.0 | 453.9 | 553.7 | 625.3 |
| | Hot water pressure drop | kPa | 41 | 41 | 51 | 57 | 60 | 62 | 62 | 61 | 63 | 63 |
| | Water flow at water source | $m^3$/h | 192.9 | 218.0 | 260.1 | 318.2 | 359.4 | 395.7 | 435.9 | 520.1 | 636.4 | 718.8 |
| | Water pressure drop at water source | kPa | 65 | 65 | 75 | 80 | 81 | 83 | 85 | 85 | 87 | 87 |
| Compressor | Model | | Semi-enclosed dual-screw compressor | | | | | | | | | |
| | Quantity | | 1 | 1 | 1 | 1 | 1 | 2 | 2 | 2 | 2 | 2 |
| Startup mode | | | Y-Δ | | | | | | | | | |
| Power supply | | | 380V/3~/50Hz | | | | | | | | | |
| Condenser | Model | | Shell-and-tube | | | | | | | | | |
| | Quantity | | 1 | 1 | 1 | 1 | 1 | 1 | 1 | 1 | 1 | 1 |
| Evaporator | Model | | Full-liquid | | | | | | | | | |
| | Quantity | | 1 | 1 | 1 | 1 | 1 | 1 | 1 | 1 | 1 | 1 |
| Refrigerant | Type | | R134a | | | | | | | | | |
| Lubricant | Brand | | EK03 | | | | | | | | | |
| | Filling amount | L | 50 | 50 | 60 | 60 | 60 | 80 | 80 | 100 | 100 | 100 |
| Temperature control | | | Water temperature PID control | | | | | | | | | |
| External diameter of chilled water inlet/outlet pipe | | φ(mm) | 219.1 | 219.1 | 219.1 | 219.1 | 219.1 | 219.1 | 219.1 | 273 | 273 | 273 |
| External diameter of cooling water inlet/outlet pipe | | φ(mm) | 139.7 | 139.7 | 168.3 | 168.3 | 168.3 | 168.3 | 168.3 | 168.3 | 168.3 | 168.3 |
| Insulation materials | | | Elastomeric flexible closed-cell insulation material | | | | | | | | | |
| Unit weight | | kg | 5550 | 5750 | 5850 | 5950 | 6100 | 10010 | 10400 | 10570 | 10770 | 11080 |
| Operating weight | | kg | 5980 | 6180 | 6280 | 6380 | 6550 | 10750 | 11150 | 11310 | 11510 | 11810 |
| Rated current (cooling) | | A | 252 | 271 | 321 | 387 | 437 | 512 | 542 | 642 | 774 | 874 |
| Rated current (heating) | | A | 304 | 335 | 398 | 479 | 541 | 617 | 670 | 796 | 958 | 1082 |
| Startup current | | A | 749 | 882 | 1358 | 1358 | 1388 | 749 | 882 | 1358 | 1358 | 1388 |
| Maximum startup current (cooling) | | A | 749 | 882 | 1358 | 1358 | 1388 | 1005 | 1153 | 1679 | 1745 | 1825 |
| Maximum startup current (heating) | | A | 749 | 882 | 1358 | 1358 | 1388 | 1314 | 1488 | 2077 | 2224 | 2366 |
| Length x width x height | | mm | 4110x1800x2450 | | 4110x1900x2550 | | | 5110x2200x2650 | | 5300x2200x2750 | | |

Note:

- Nominal cooling conditions: The inlet/outlet water temperature of the evaporator is 12/7°C; the inlet/outlet water temperature of the condenser is 25/30°C.
- Nominal heating conditions: The water flow in the preceding table is guaranteed, the inlet/outlet water temperature of the condenser is ~/45°C; the inlet/outlet water temperature of the evaporator is 7/3.8°C (note: add anti-freezer if the water temperature in the water circuit of the water source in winter is below 3°C).
- The water pressure drop of the evaporator or condenser does not include resistance of any external water pipe or component.
- For details about on-site power distribution and wiring for unit installation, see the nameplate or installation manual of the unit.

# Unit Outer Dimensions

## ST standard model (EKSC250~EKSC900)

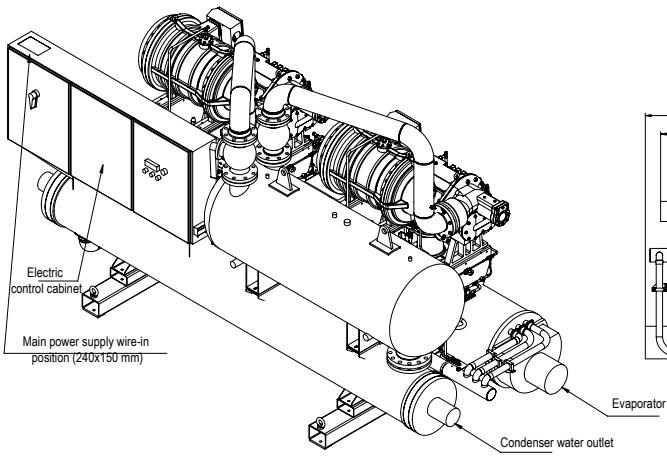


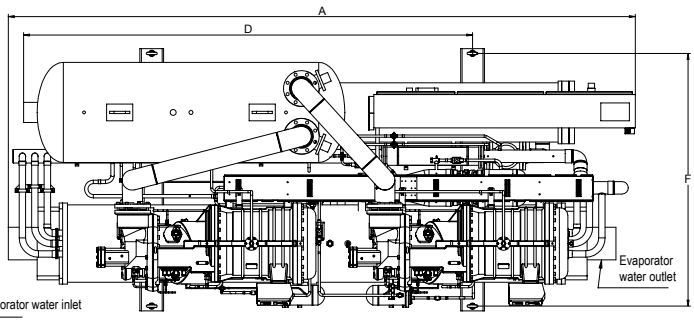


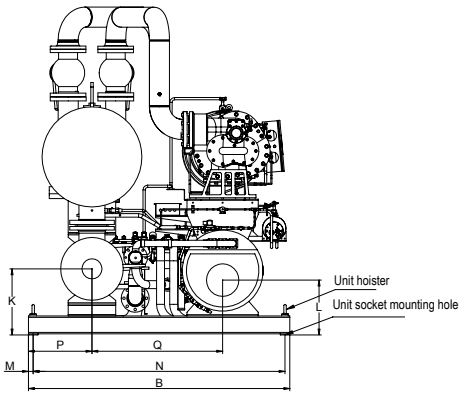


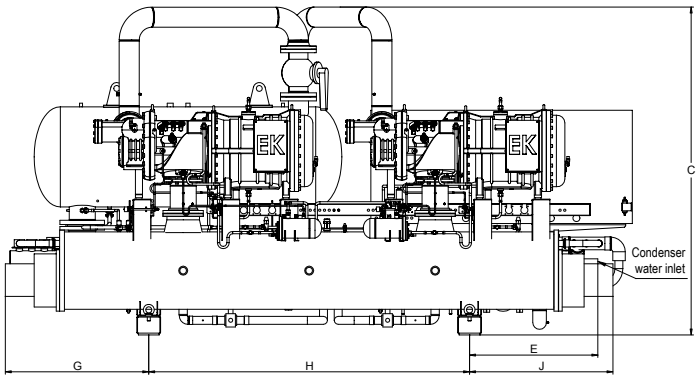


Measurement: mm

| Model | A | B | C | D | E | F | G | H | J | K | L | M | N | P | Q |
|---|---|---|---|---|---|---|---|---|---|---|---|---|---|---|---|
| EKSC250 | 5060 | 2200 | 2450 | 3775 | 1075 | 2120 | 1180 | 2700 | 1180 | 500 | 388 | 40 | 2120 | 535 | 1100 |
| EKSC280 | 5060 | 2200 | 2450 | 3775 | 1075 | 2120 | 1180 | 2700 | 1180 | 500 | 388 | 40 | 2120 | 535 | 1100 |
| EKSC330 | 5060 | 2200 | 2550 | 3775 | 1075 | 2120 | 1180 | 2700 | 1180 | 500 | 388 | 40 | 2120 | 535 | 1100 |
| EKSC400 | 5060 | 2200 | 2550 | 3775 | 1075 | 2120 | 1180 | 2700 | 1180 | 500 | 388 | 40 | 2120 | 535 | 1100 |
| EKSC450 | 5060 | 2200 | 2550 | 3775 | 1075 | 2120 | 1180 | 2700 | 1180 | 500 | 388 | 40 | 2120 | 535 | 1100 |
| EKSC500 | 5100 | 2200 | 2650 | 3780 | 1075 | 2120 | 1180 | 2700 | 1180 | 500 | 388 | 40 | 2120 | 535 | 1100 |
| EKSC560 | 5100 | 2200 | 2650 | 3780 | 1075 | 2120 | 1180 | 2700 | 1180 | 500 | 388 | 40 | 2120 | 535 | 1100 |
| EKSC660 | 5300 | 2200 | 2750 | 3780 | 1080 | 2120 | 1207 | 2700 | 1207 | 555 | 460 | 40 | 2120 | 535 | 1100 |
| EKSC800 | 5300 | 2200 | 2750 | 3780 | 1080 | 2120 | 1207 | 2700 | 1207 | 555 | 460 | 40 | 2120 | 535 | 1100 |
| EKSC900 | 5300 | 2200 | 2750 | 3780 | 1080 | 2120 | 1207 | 2700 | 1207 | 555 | 460 | 40 | 2120 | 535 | 1100 |

# Unit Outer Dimensions

## XE□□□ (EKSC265~EKSC1000)

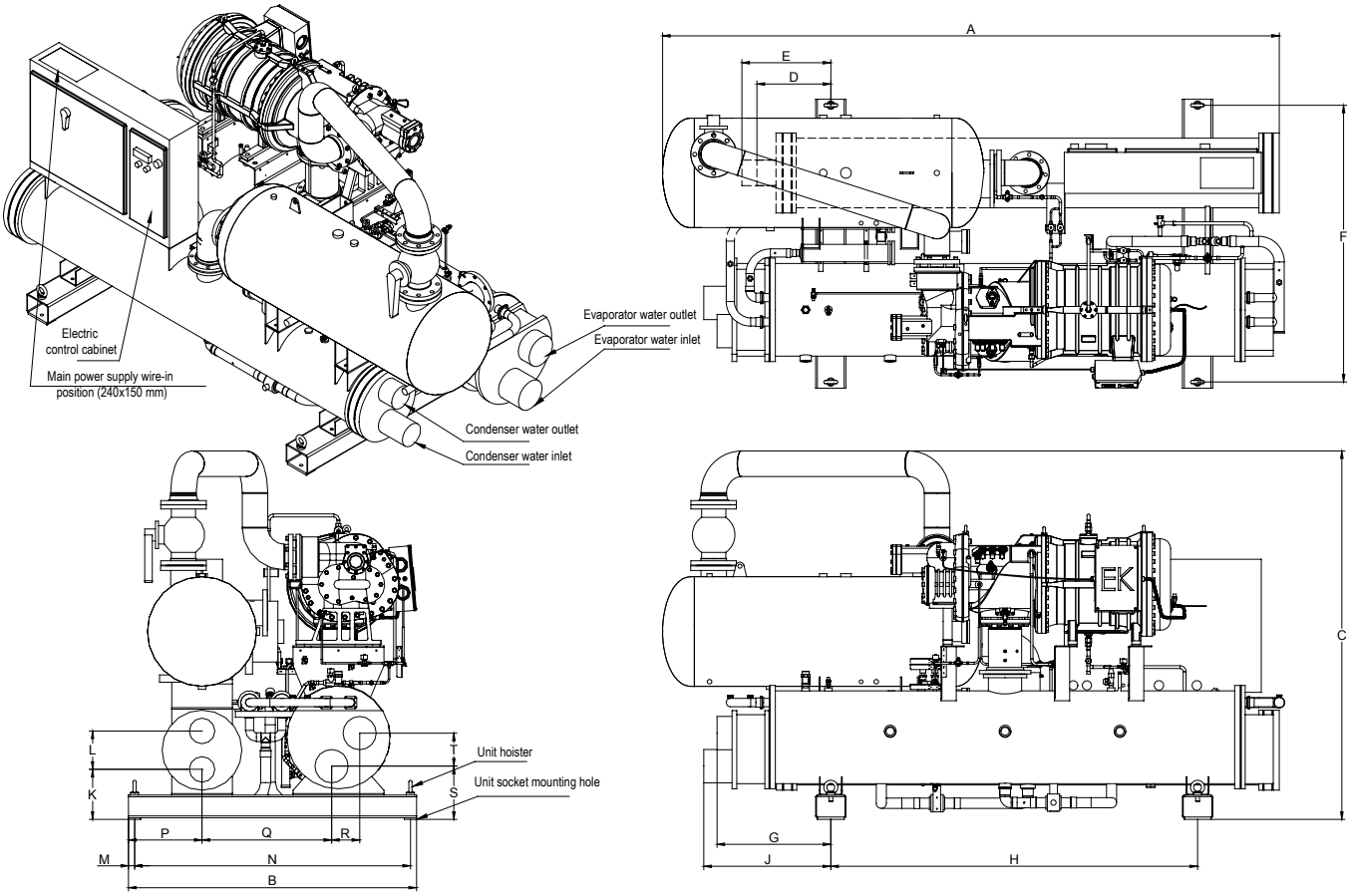


Measurement: mm

| Model | A | B | C | D | E | F | G | H | J | K | L | M | N | P | Q | R | S | T |
|---|---|---|---|---|---|---|---|---|---|---|---|---|---|---|---|---|---|---|
| EKSC265 | 4110 | 1800 | 2450 | 484 | 584 | 1720 | 751 | 2120 | 838 | 329 | 252 | 40 | 1720 | 485 | 755 | 185 | 350 | 217 |
| EKSC300 | 4110 | 1800 | 2450 | 484 | 584 | 1720 | 751 | 2120 | 838 | 329 | 252 | 40 | 1720 | 485 | 755 | 185 | 350 | 217 |
| EKSC360 | 4110 | 1900 | 2550 | 487 | 587 | 1820 | 751 | 2420 | 838 | 329 | 252 | 40 | 1820 | 485 | 855 | 185 | 350 | 217 |
| EKSC440 | 4110 | 1900 | 2550 | 487 | 587 | 1820 | 751 | 2420 | 838 | 329 | 252 | 40 | 1820 | 485 | 855 | 185 | 350 | 217 |
| EKSC500 | 4110 | 1900 | 2550 | 487 | 587 | 1820 | 751 | 2420 | 838 | 329 | 252 | 40 | 1820 | 485 | 855 | 185 | 350 | 217 |
| EKSC550 | 5110 | 2200 | 2650 | 487 | 587 | 1820 | 751 | 2420 | 838 | 329 | 252 | 40 | 1820 | 485 | 855 | 185 | 350 | 217 |
| EKSC600 | 5110 | 2200 | 2650 | 487 | 587 | 2120 | 1100 | 2700 | 1180 | 379 | 352 | 40 | 2120 | 535 | 1100 | 200 | 400 | 217 |
| EKSC720 | 5300 | 2300 | 2750 | 487 | 587 | 2120 | 1100 | 2700 | 1180 | 379 | 352 | 40 | 2120 | 535 | 1100 | 200 | 400 | 217 |
| EKSC880 | 5300 | 2300 | 2750 | 487 | 587 | 2120 | 1100 | 2700 | 1180 | 379 | 352 | 40 | 2120 | 535 | 1100 | 200 | 400 | 217 |
| EKSC1000 | 5300 | 2300 | 2750 | 487 | 587 | 2120 | 1130 | 2700 | 1210 | 379 | 352 | 40 | 2120 | 535 | 1100 | 200 | 400 | 217 |

EUROKLIMAT®

www.euroklimat.com

ISO9001: 2008

ISO14001: 2004

CNAS L5123

**EKSCSG1304-Catalog-FB**

- Illustrations in this document may be different from real products. Please check real products while making a purchase.
- Product specifications, features, performance parameters, structures and exteriors are subject to change without further notice. Please refer to the nameplate of the product for detailed information.
- Data in this document has been carefully checked and reviewed. EUROKLIMAT cannot be held responsible for any consequence arising from print errors and omissions.
- Euroklimat reserves the ultimate right to interpret this document.